NOTES : UNLESS OTHERWISE SPECIFIED
1. INTERPRET DIMENSIONS AND TOLERANCES PER ANSI Y14.5M
2. ALL DIMENSIONS ARE IN MILLIMETERS.
3. MATERIAL SW-C (SWIC-F NICKEL PRECOATED) WIRE DIA 1.40
4. TOLERANCES : .XX ±0.254
.XXX ±0.127
ANGLES ± 3°
5. INNER CORNER RADIUS 1.5

REVISIONS				
REV	DATE	DESCRIPTION	CHG	APPR
	MAR 02 '17	CHANGED PART NAME	Y. S.	Y. S.

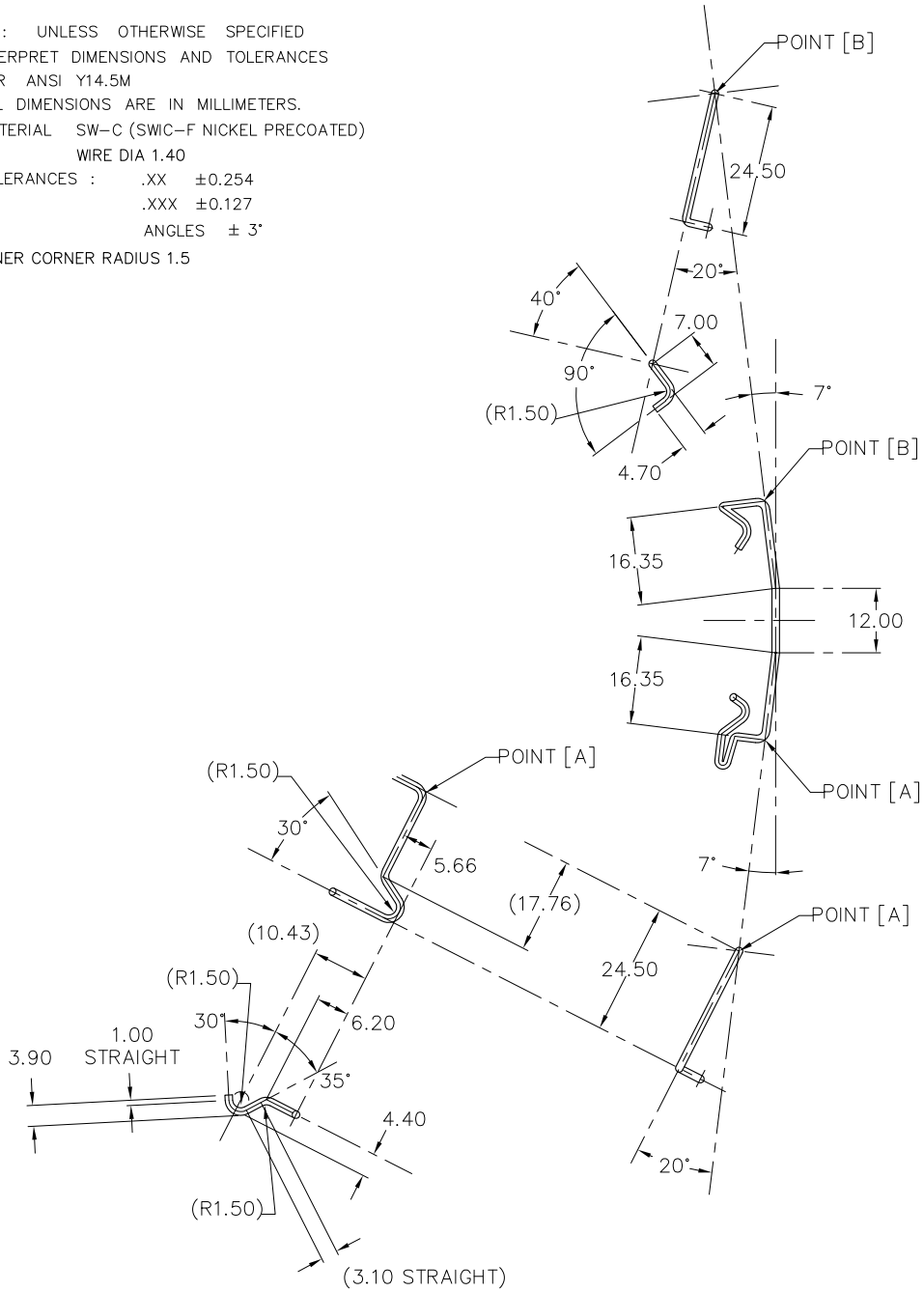

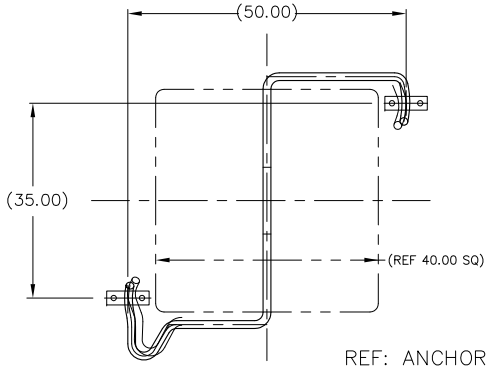

REF: ANCHOR LAYOUT

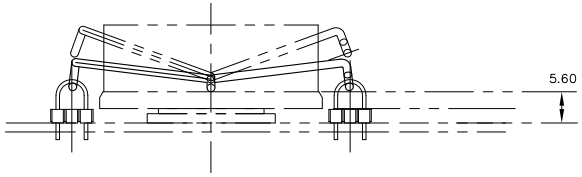

ITEM	PART NO.	PART NAME	REMARK	Q'TY
ALPHA CO.,LTD.			CSTMR'S PART NO.	
		MATERIAL SEE NOTE 3	NAME EZR-50x35	
SCALE 1 : 1		APPR & CHCK Y.SUZUKI	PART NO. & DWG NO. S001ZBFX	REV
DATE JAN 06 2017		DSGN & DWG Y.SUZUKI	RDCTN:	LOFF:

A3